SALES DRAWING SALES DRAWING

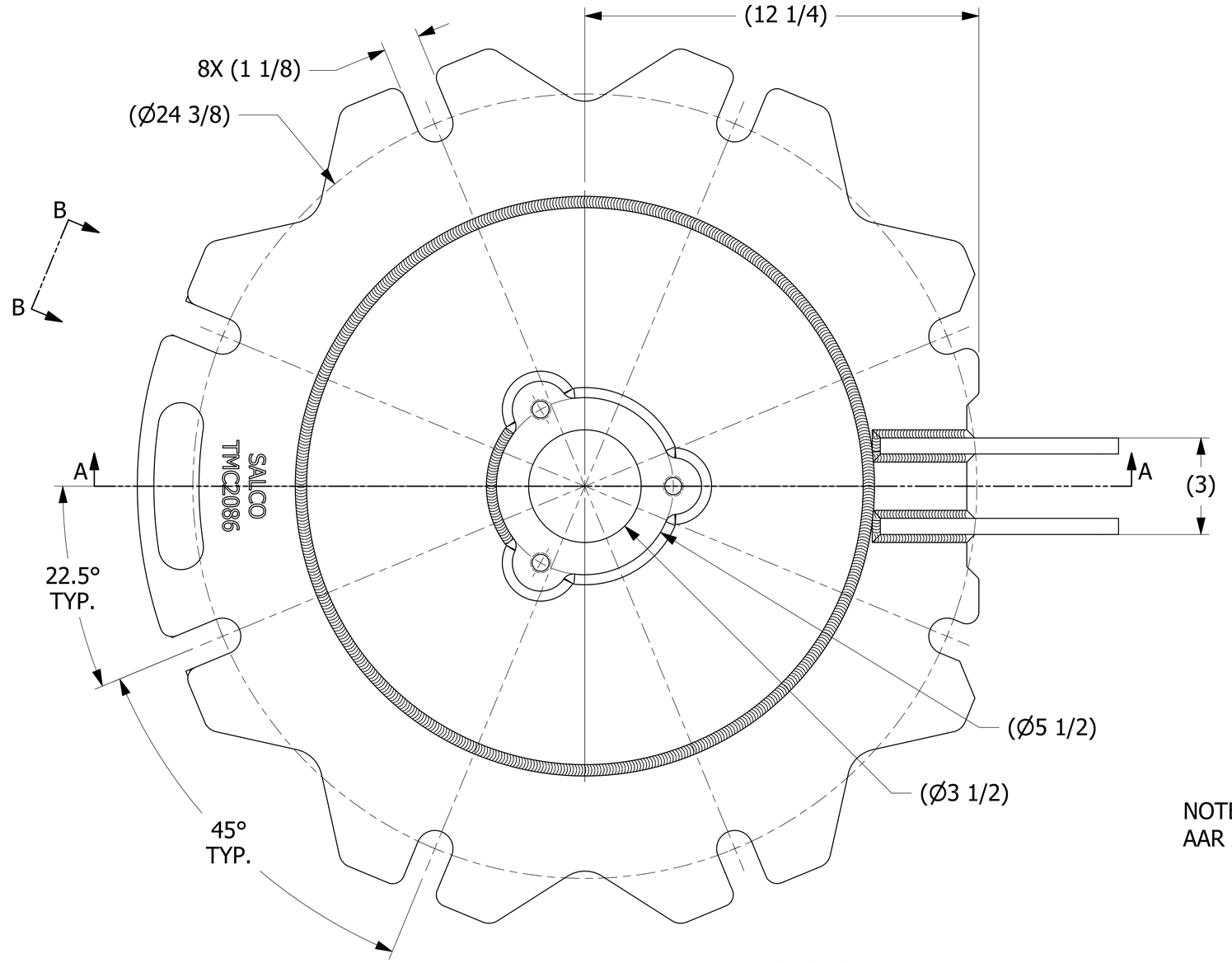

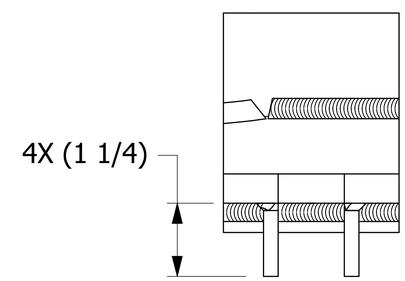

VIEW B-B
SCALE 1 : 1

NOTE:
AAR APPROVAL # E-182113.

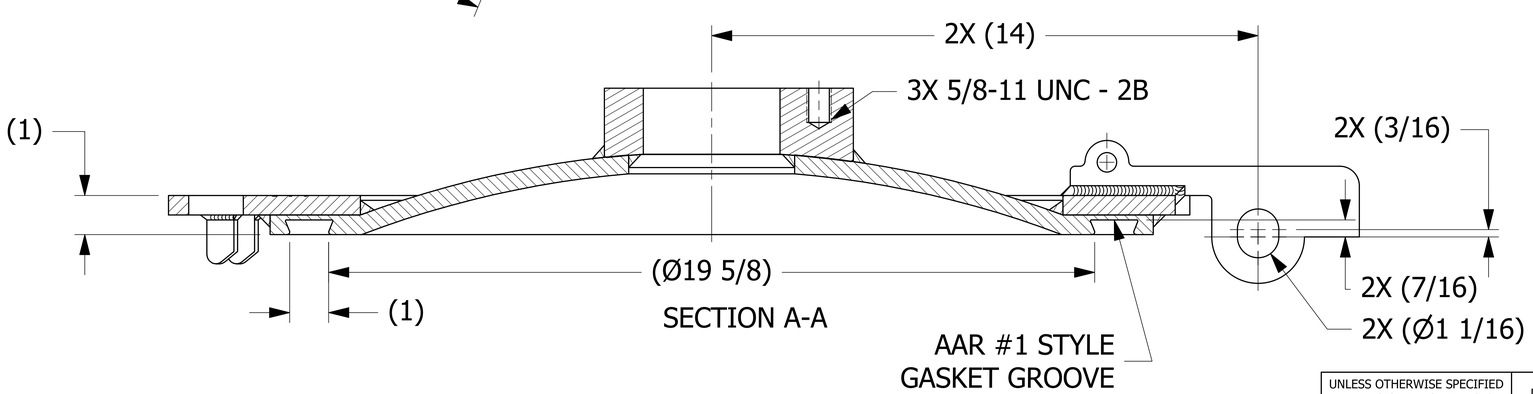

SECTION A-A

REV	BY	DATE	DESCRIPTION
N	CHL	1-28-19	REMOVED QAP4A-1 NOTE; Q-2.15.7 WAS QAP4C-1; REPLACED DSS 12 W/D-005 & D-008; AAR # WAS E-089004
M	RJP	10-5-17	HINGE WELD WAS 3/8"; ADDED 2X (3/16) & NOTE 6; ADDED "SALCO" TO ENGRAVING; 3.00 +.00/-.06 WAS 3.00
L	WEB	6-19-17	REPLACED TMCR208S6 & TMCDQIS6MF W/ TMCDR2086, REPLACED TMCHS4UT W/ B4173, UPDATED VIEWS AND NOTES
K	KHK	12-27-12	ADDED SECTON D. UPDATED VIEWS, BOM, DRAWING SIZE
J	JJK	4-20-12	ADDED NOTE #5 & HEAT/LOT NOTE
I	CHL	11-1-10	UPDATEDNOTES, UPDATED WELD SYMBOL. ADDED PARTNUMBER TO RING SURFACE
H	CHL	5-27-08	UPDATED NOTES & ADDED VIEW C
G	AJB	5-5-06	AAR APPROVAL WAS E-989070
F	CHL	8-8-00	CHANGED DIM FROM 11.69-11.96
E	CHL	2-24-00	UPDATED TO 3D
D	FOD	8-11-99	UPDATED DRAWING W/NEW HINGE
C	FOD	9-3-98	ADDED NOTCHES
B	FOD	9-3-98	CHANGED BOLT CIRCLE WAS 23.875
A	SAB	7-29-98	UPDATED SAFETY STOPS

UNLESS OTHERWISE SPECIFIED
DIMENSIONAL TOLERANCES
FRACTIONAL: ±1/16
X.XX: ±.03
X.XXX: ±.015
ANGULAR: ±1°
DEBURR ALL SHARP EDGES.
ALL MACHINED SURFACES TO HAVE A 125 RMS FINISH UNLESS NOTED OTHERWISE.
THIRD ANGLE PROJECTION

DRAWN BY:	SAB
CHECKED BY:	ACC
PROTOTYPE BY:	SAB
PROTOTYPE DATE:	11/17/1997
APPROVED FOR PRODUCTION BY:	ACC
PRODUCTION DATE:	11/17/1997

SALCO PRODUCTS, INC.

PART NAME: MANWAY COVER 20" 8-BOLT

MATERIAL: 316L SS

PROJECT #: 970929 | SHEET #: 1 OF 1 | SCALE: 2:3

DRAWING #: E9282 | PART #: TMC2086

THIS PRINT, PROPERTY OF SALCO PRODUCTS INC, CONTAINS PROPRIETARY INFORMATION AND MUST NOT BE COPIED, REPRODUCED, OR USED DETRIMENTALLY TO OUR INTEREST.

SALES DRAWING SALES DRAWING